Education Reform and Development, 2026, Volume 8, Issue 10
https://bbwpublisher.com/journal/erd
Online ISSN: 2652-5372
Print ISSN: 2652-5364

A Comparison Between Theoretical-Oriented Teaching and Project-Based Teaching — Exploration of Curriculum Reform in CC2530

Weiheng Ou*

Guangzhou College of Commerce, Guangzhou 511363, Guangdong, China

****Author to whom correspondence should be addressed.***

Copyright: © 2026 Author(s). This is an open-access article distributed under the terms of the Creative Commons Attribution License (CC BY 4.0), permitting distribution and reproduction in any medium, provided the original work is cited.

Abstract: The CC2530 single-chip microcomputer is the underlying development technology for the Internet of Things major, and it serves as the foundation for subsequent wireless sensor networks and IoT embedded systems. According to the current development status of the Internet of Things, wireless sensor networks, and microprocessors, this paper conducts a comparative analysis of the traditional theory-oriented teaching mode and the project-based teaching mode for the CC2530 single-chip microcomputer course combined with practical teaching. By synthesizing the advantages and characteristics of the CC2530 single-chip microcomputer course under different teaching modes, it puts forward exploratory ideas for the reform of the CC2530 course and specifies the theoretical and technical capabilities that applied-oriented college students are supposed to possess. Adopting the reform idea of two-in-one blended teaching that integrates theories with project practice, it aims to improve students' theoretical knowledge level, their ability to solve practical problems and innovative capacity.

Keywords: Project-based teaching; CC2530 single-chip microcomputer; Wireless sensor network

Online publication: November 25, 2026

1. Introduction

In 2024, the sessions of the National People's Congress and the Chinese People's Political Consultative Conference proposed to vigorously develop new-quality productive forces and artificial intelligence. As the foundation of artificial intelligence, the Internet of Things is an important technology driving social development and industrial-technological progress. The CC2530 single-chip microcomputer is a single-chip microcomputer applied to IoT wireless sensors built on the theoretical foundation of the MCS-51 single-chip microcomputer. The course *Principles and Applications of CC2530 Single-Chip Microcomputer* paves the way for IoT majors to learn the Z-Stack protocol stack and use ZigBee. Among universities offering IoT-related majors, the course Wireless Sensor Network is widely offered, yet only a small number of universities offer the CC2530 course, or merely allocate four class hours for introductory explanations within the Wireless

Sensor Network course. Based on personal teaching experience, the author compares two different teaching approaches for the CC2530 course, reflects on teaching outcomes, and explores ideas for curriculum reform [1].

2. Introduction to CC2530

Single-chip microcomputer courses are fundamental specialty courses for the Department of Electronic Information. Centering on the basic architecture, working principles, instruction sets, program design, on-chip resources and expansion technologies of the MCS-8051 single-chip microcomputer, these courses help students become familiar with basic methods for the development and design workflow of single-chip microcomputer application systems, and cultivate students' capabilities to develop and design software and hardware for single-chip microcomputer systems.

Integrated with an 8051 core and an RF module, the CC2530 is a system-on-chip solution for implementing embedded 2.4 GHz IEEE 802.15.4, ZigBee and RF4CE applications. It can build sufficiently powerful network nodes with low total bill-of-material costs. The CC2530 single-chip microcomputer adopts an enhanced 8051 CPU internally, combined with an advanced RF transceiver. It has 8 KB RAM, and four types of in-system programmable flash memories of different capacities: 32 KB, 64 KB, 128 KB and 256 KB, along with other powerful functions.

Boasting powerful peripheral functions, the CC2530 supports battery-voltage detection and on-chip temperature detection. The watchdog timer can be configured to guarantee safe program operation. It provides multiple power-supply modes for configuration as required, minimizing chip power consumption while ensuring normal operation. Its built-in wireless transceiver enables wireless communication with very few external components, featuring extremely high receiving sensitivity and anti-interference performance. Equipped with the 8051 core, it delivers favorable performance and can retain data under various power-supply modes.

3. Comparison between theoretical teaching and project-based teaching

3.1. Comparison of curriculum objectives

Theoretical-oriented teaching is goal-oriented toward "teaching", representing traditional knowledge-imparting-guided instruction. It imparts knowledge and principles to students step-by-step from the superficial to the profound through three links: concept quotation, explanation and case citation. Project-based teaching is goal-oriented toward "learning". As a task-action-oriented teaching organization form, it takes knowledge contents as experimental tasks and objectives, and organically combines principles with practice in the form of experiments, which helps improve students' comprehensive quality and capabilities [2].

3.2. Comparison of curriculum contents

The CC2530 chip has 40 pins, including 21 I/O pins, six 2.6 V ～ 3.6 V analog power-supply pins, two 2.6 V–3.6 V digital power-supply pins, one 1.8 V internal digital power-supply pin, four GND pins, two radio-signal input pins, two 32 MHz external crystal-oscillator pins, one digital-input reset pin and one external precision-bias-resistor pin for analog I/O reference current. Apart from pins, the CC2530 single-chip microcomputer also contains various peripherals, such as a flash-memory controller, a 5-channel DMA controller, four timers, one sleep timer, two serial-communication interfaces, an 8-channel 12-bit ADC, one random-number generator, one watchdog timer, and an AES security coprocessor.

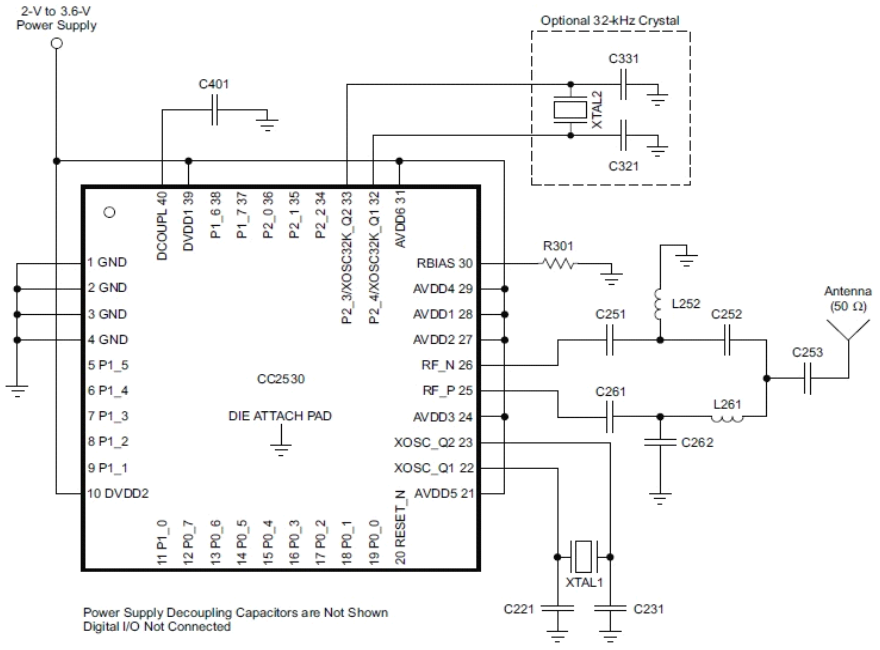

Figure 1. Application Circuit of CC2530.

Both theoretical-oriented teaching and project-based teaching cover ten chapters: Basics Introduction, General-Purpose I/O Ports, External Interrupts, Timers/Counters, Serial-Port Communication, A-D Conversion, Watchdog, Power Management, DMA and Flash Memory.

In the theory-oriented teaching mode, each chapter first introduces the circuit design of corresponding modules on the CC2530 core board, enabling students to understand circuit and pin connections for each module. The second part illustrates module composition, working principles and characteristics. The third part explains all registers involved in the module as well as functions and configuration modes of corresponding pins, followed by examples demonstrating software-configuration methods for each register. For instance, for the general-purpose I/O module, the direction register PxDIR describes functions of eight pins in tables, with an example setting P0_1 as an input pin by the software statement P0DIR&=~0x02.

Project-based teaching is a teaching-organization form oriented toward cultivating students' practical-application capabilities. It sets projects as learning tasks and guides students to participate in the design and development of specific projects progressively according to curriculum contents. Knowledge points are taught synchronously during experiments. It organically combines theoretical teaching and practical teaching in class to improve students' quality and capabilities for solving practical problems [3]. In class, task requirements are first put forward based on curriculum-task contents. When implementing tasks, theoretical explanation and analysis are conducted for required chapter-related knowledge points. Take the general-purpose I/O chapter as an example: after analyzing theoretical foundations required for task implementation, functions and characteristics of I/O ports in this chapter are introduced. Registers related to I/O ports are explained in program design for task implementation, yet pin-function lists are relatively concise and hard for students to understand. Therefore, knowledge-system frameworks, working principles and register-pin-function tables are elaborated in greater detail in theoretical-oriented teaching [4].

3.3. Comparison of curriculum tasks

Curriculum-task implementation under the theoretical-oriented teaching mode mainly focuses on in-class

experimental verification of major CC2530 single-chip-microcomputer modules. After being given experimental requirements, students figure out experimental principles by using knowledge of module-register configuration, design experimental workflows, and are provided with key control statements. After reading the complete sample programs, students finish task design and program compilation for thinking questions by imitating sample codes.

Curriculum tasks for project-based teaching combine real-life cases and raise practical problems to be solved. By explaining key experimental principles and mastering project-design essentials, students are guided to reflect on program-design workflows. Project-based teaching mainly drives students to complete experiments via tasks, helping them better understand real-life application cases of single-chip-microcomputer modules they have learned [5]. Take the general-purpose I/O-port module as an example: in theory-oriented teaching, after finishing register-theory instruction, students conduct a running-light experiment, record experimental results, and modify programs to test register functions. By contrast, project-based teaching puts forward task requirements from real-life scenarios, and takes traffic-light implementation as a case for the general-purpose I/O-port module. Students are required to carry out the design. During task development, they analyze program workflows, list function tables of involved module registers and key program statements. After learning and reflection, students understand design intentions and theoretical knowledge, verify programs and complete thinking tasks. In terms of integrating theories with practical applications through experiments, project-based teaching enables students to more easily accept and understand how learned theories are applied in future practical work, laying foundations for subsequent courses and graduation projects.

3.4. Comparison of process-evaluation modes

Under the theory-oriented teaching mode, theoretical lectures are delivered first, with one computer-room experiment arranged after each chapter. The process-evaluation system designed by the author consists of 40 % regular-performance score and 60 % final-term score. The regular-performance score includes 20 % attendance, 40 % assignments and 40 % experiments. The final-term assessment adopts an examination-inspection form requiring students to design an intelligent IoT device based on the CC2530.

For the project-based teaching mode, classes are held in laboratories. When explaining cases combining theories and practical-problem applications, students spend more time on control operations and experiments. The author's process-evaluation system includes a 20 % regular-performance score, a 30 % experimental-operation examination, and a 50 % final-term score. The regular-performance score includes 30 % attendance, 20 % basic experiments and 40 % advanced experiments. The final-term assessment also adopts an examination-inspection form requiring students to design an intelligent IoT device based on the CC2530.

The author adopted two different teaching modes and corresponding evaluation systems for classes taught in two semesters, respectively. In final-term overall scores, the average score of project-based-teaching classes was 79 points with a standard deviation of 6.55; the average score of theoretical-oriented-teaching classes was 73 points with a standard deviation of 6.58.

3.5. Comparison of students' knowledge-mastery levels

According to final-term evaluation systems for the two teaching modes, students' knowledge-mastery levels are compared via their program design and defense in final-term inspections, as shown in **Table 1**. Statistical data show that comprehensive scores of the two teaching methods in final-term inspections have little overall difference. Students under theoretical-oriented teaching show slightly weaker design-and-application

capabilities compared with those receiving project-based teaching. From the perspective of theoretical-knowledge mastery, students receiving theoretical-oriented teaching achieve higher theoretical proficiency and can basically illustrate module structures as well as register and pin functions of the CC2530 single-chip microcomputer.

Table 1. Comparison of Knowledge Mastery Under Different Teaching Methods

Teaching Method	Design (45 %)	Defense (55 %)	Comprehensive Score
Theoretical-Oriented Teaching	70	75	72.75
Project-Based Teaching	78	70	73.6

4. Exploration of curriculum-reform ideas

4.1. Select appropriate textbooks and develop original self-compiled textbooks

Against the background of artificial intelligence in the new era, traditional theoretical-oriented textbooks focus on knowledge-structure-principle guidance and elaborate on functions and applications of various CC2530 modules and registers. Though students master knowledge points, they cannot flexibly apply knowledge in real-life practice, resulting in the phenomenon of "learning without application" and insufficient practical capabilities [6]. Especially for applied-oriented undergraduate students, their practical capabilities may fall behind those of higher-vocational-college students [7]. To equip applied-oriented undergraduates with both solid theoretical knowledge and hands-on practical capabilities, appropriate textbooks shall be selected or original self-compiled textbooks shall be developed. After comparing current CC2530 textbooks and considering classroom-teaching conditions and student capabilities, self-compiled textbooks shall contain both detailed and clear explanations of basic theoretical knowledge and experimental tasks for project-based teaching. Theoretical chapters shall avoid oversimplification, while experimental tasks shall relate to real-life scenarios and cover basic experiments as well as thinking questions of moderate difficulty. Students are encouraged to exert creativity and organizational skills to organically integrate fragmented knowledge and experimental-verification segments, so as to realize knowledge transfer and capability transfer when solving practical problems in the future. When compiling textbooks, excellent curriculum requirements featuring new-era technologies and ideas shall also be considered. Micro-lectures shall be embedded so that students can learn theories on mobile phones anytime and anywhere, and refer to experimental videos for reference and error correction during experiments.

4.2. Combine examinations and inspections for curriculum assessment

Before studying the CC2530 course, some schools arrange the MCS-51 single-chip-microcomputer course as a prerequisite, while others offer the CC2530 course directly. Whether students have learned the 51 single-chip microcomputer beforehand or not, examinations serve as the optimal final-assessment method for students to truly understand course knowledge. Students gain deeper comprehension of learned knowledge through review, memorization and exercises. Nevertheless, for the CC2530 course, students will further study the Z-Stack protocol stack based on this foundation and may adopt it as project-design technology in graduation projects. Therefore, experimental-operation assessment shall also be included in final-term evaluation. The comprehensive-evaluation criteria are set as: 20 % regular-performance score, 30 % experimental-operation examination, and 50 % theoretical examination. Upon completion of final-term assessments, special CC2530

curriculum practice shall be offered to facilitate transition to subsequent Z-Stack-protocol-stack learning and graduation projects. Students shall combine learned theories and project-practice tasks with sensors to design an intelligent IoT device. Curriculum practice re-examines students' mastery of theoretical knowledge and hands-on capabilities and strengthens their ability to apply the CC2530 to solve real-life practical problems.

4.3. Scientifically design curriculum syllabus and class-hour allocation

Curriculum syllabi and teaching plans are programs guiding teaching activities for every course. As a compulsory foundational course for wireless-sensor networks, the CC2530 course determines students' learning outcomes for subsequent courses and graduation projects according to their mastery of knowledge and experiments. Teaching plans shall be elaborately designed to deliver both theoretical knowledge and practical skills. It is essential not only to "give a man fish", but also to "teach a man how to fish"[8]. In daily CC2530 classes, students shall understand in-depth principles from theoretical knowledge and figure out how to solve real-life problems and conduct design with principles in experiments[9]. For class-hour allocation to satisfy both theory-oriented teaching and project-based teaching, four class hours for theoretical lectures and two class hours for experiments shall be arranged every week. Thirty-two additional practice hours shall be scheduled after course completion. Students are required to develop an intelligent IoT device combined with sensor applications independently.

4.4. Skillfully apply AI-assisted teaching to keep pace with times

With the development of the information age, artificial-intelligence (AI) technology constitutes an important driving force and emerging technical science for the new round of scientific-technological revolution. In traditional teaching, some students encounter heavy learning difficulties, low learning efficiency, and insufficient learning interest. Against the background of new-era information-based education, teachers may properly utilize AI to improve students' learning interest and efficiency. AI experimental platforms shall be built equipped with intelligent VR-AR devices, enabling students to simulate experiments for real-life scenarios unavailable in physical laboratories in intelligent virtual environments, and enhancing their capabilities in experimental-operation and practical-problem solving. New intelligent teaching platforms shall be constructed, and AI teaching assistants shall be implemented via artificial intelligence to help students resolve course difficulties and search for reference materials.

4.5. Refine process management to boost students' learning enthusiasm

For applied-oriented universities, to ensure students grasp core theories and possess certain technical-operation skills, teachers shall focus on details and implement refined management in teaching procedures[10]. Semester class hours are limited and tight. Teachers shall properly control teaching intensity: imposing appropriate pressure on students without causing excessive anxiety. Tasks assigned in regular classes shall be of moderate difficulty, including basic tasks and advanced projects. Sufficient time shall be reserved for completion. Brief defense-and-scoring activities shall be held for individuals or groups upon finishing basic tasks, preventing passive "lying-flat" learning among inactive students and enhancing learning initiative. Extra points shall be awarded in regular-performance scores for students who finish advanced projects. Excellent schemes may be presented via PPT reports for sharing design ideas and workflows. PPT presentations enhance students' sense of honor and self-confidence. Meanwhile, design insights and solutions for key and difficult design points can be shared among classmates to promote the common progress of the whole class.

5. Conclusion

As a highly practical and applied foundational course for IoT majors, the CC2530 course is critical for realizing M2M communication in wireless sensor networks. Exploration and reform of this course help students master technical theories while better adapting to the demands of future engineering industries and scientific-technological development. Constructing a single-chip-microcomputer curriculum system featuring fundamental theories, technical applications and practical-innovation represents an inevitable outcome of cultivating interdisciplinary IoT talents, improving the educational system and promoting high-quality educational development.

Disclosure statement

The author declares no conflict of interest.

References

[1] Pan X, Zhang C, 2024, Practice and Exploration of "Cultivating Both Morality and Competence" in the Whole-Process of Teaching—Taking the Course of CC2530 Single-Chip Microcomputer Technology and Application as an Example. Computer Knowledge and Technology, 20(3): 145–147.

[2] Chen M, Ling Z, Cao X, et al., 2024, Construction of Project-Based Teaching Paradigm for Promoting Deep Learning in Vocational Education in the Digital-Intelligence Era. Distance Education in China, 36(1): 63–72.

[3] Wang Z, Jiang Y, Yuan M, 2022, Teaching Reform of "Project-Based" Mode for the Course of Principles and Interface Technology of Single-Chip Microcomputer. Equipment Manufacturing Technology, (2): 112–114.

[4] Wang Z, Wang B, Chen Q, 2021, Teaching Practice of Principles and Applications of Single-Chip Microcomputer Based on Project-Driven Mode. Electronics World, (24): 104–106.

[5] Li C, Sun K, 2025, Teaching Reform of Single-Chip Microcomputer Course Based on Open-Source Electronic Products. Automobile Applied Technology, (11): 121–125.

[6] Liu S, Li Y, Zhao R, et al., 2025, Exploration and Research on Experimental-Teaching Reform Integrating Classroom and Practice—Taking the Course of Principles and Applications of Single-Chip Microcomputer as an Example. Education Teaching Forum, (12): 63–66.

[7] Li J, Guo T, 2022, Thoughts on Talent Cultivation in Applied-Oriented Undergraduate Universities. Journal of the Party School of Harbin Municipal Committee, (1): 59–63.

[8] Wang S, 2022, Teaching-Case Design for Secondary-Vocational Course Principles and Applications of Single-Chip Microcomputer Based on OBE Educational Concept [D]. Tianjin: Tianjin University of Technology and Education.

[9] Hu W, 2026, Exploration and Discussion on Curriculum Reform for Intelligent-Logistics-Technology Major—Taking the Course of CC2530 Single-Chip-Microcomputer Technology and Application as an Example. Journal of Hunan Post and Telecommunication College, 25(1): 98–100.

[10] Wei X, 2023, Research on the Application of Online-Offline Blended-Teaching Mode in the Course of Principles and Applications of Single-Chip Microcomputer—Taking Traffic-Light Design and Production as an Example. Paper Making Equipment & Materials, 52(11): 246–248.

Publisher's note

Bio-Byword Scientific Publishing remains neutral with regard to jurisdictional claims in published maps and institutional affiliations.